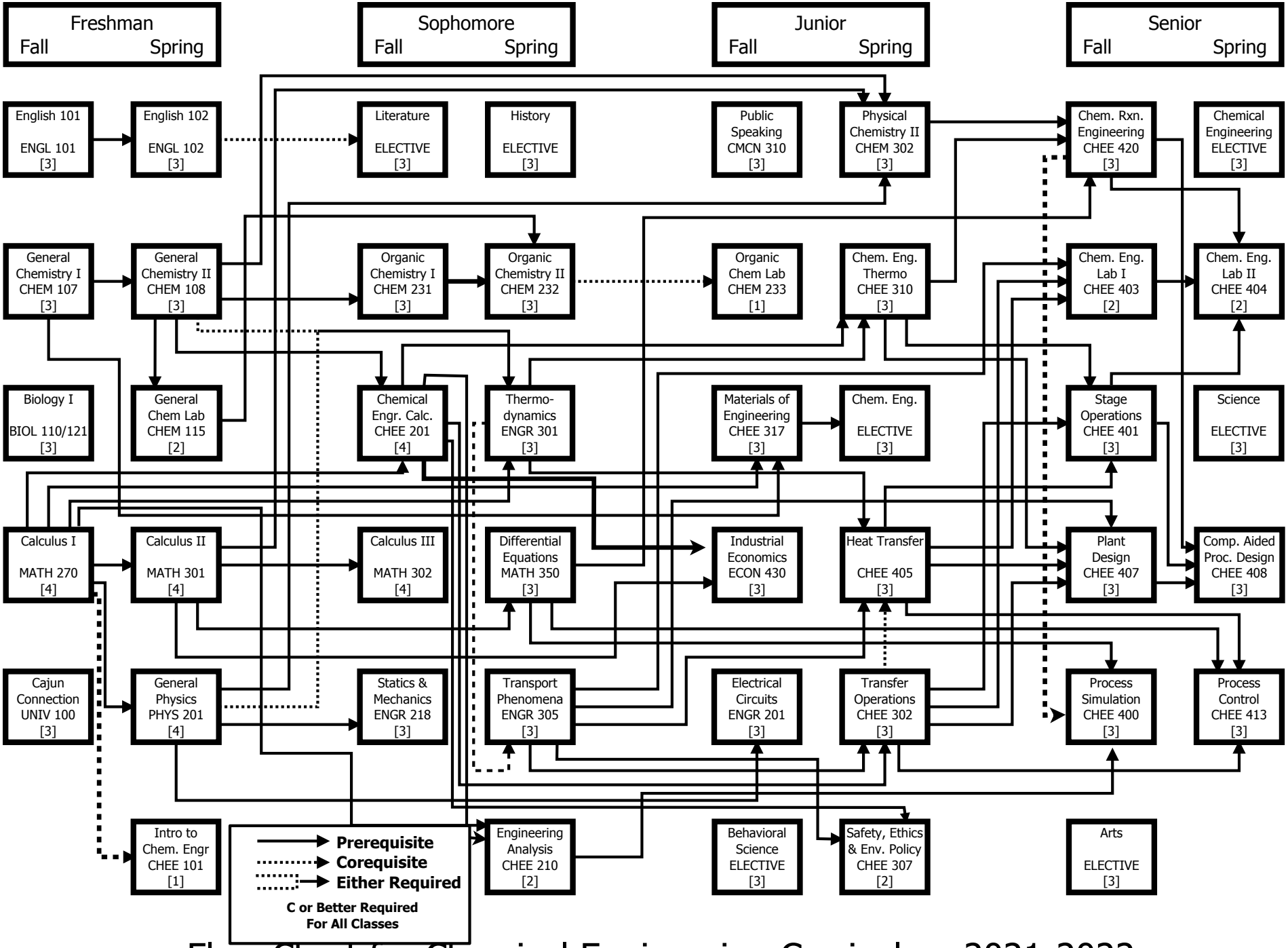

Flow Chart for Chemical Engineering Curriculum 2021-2022