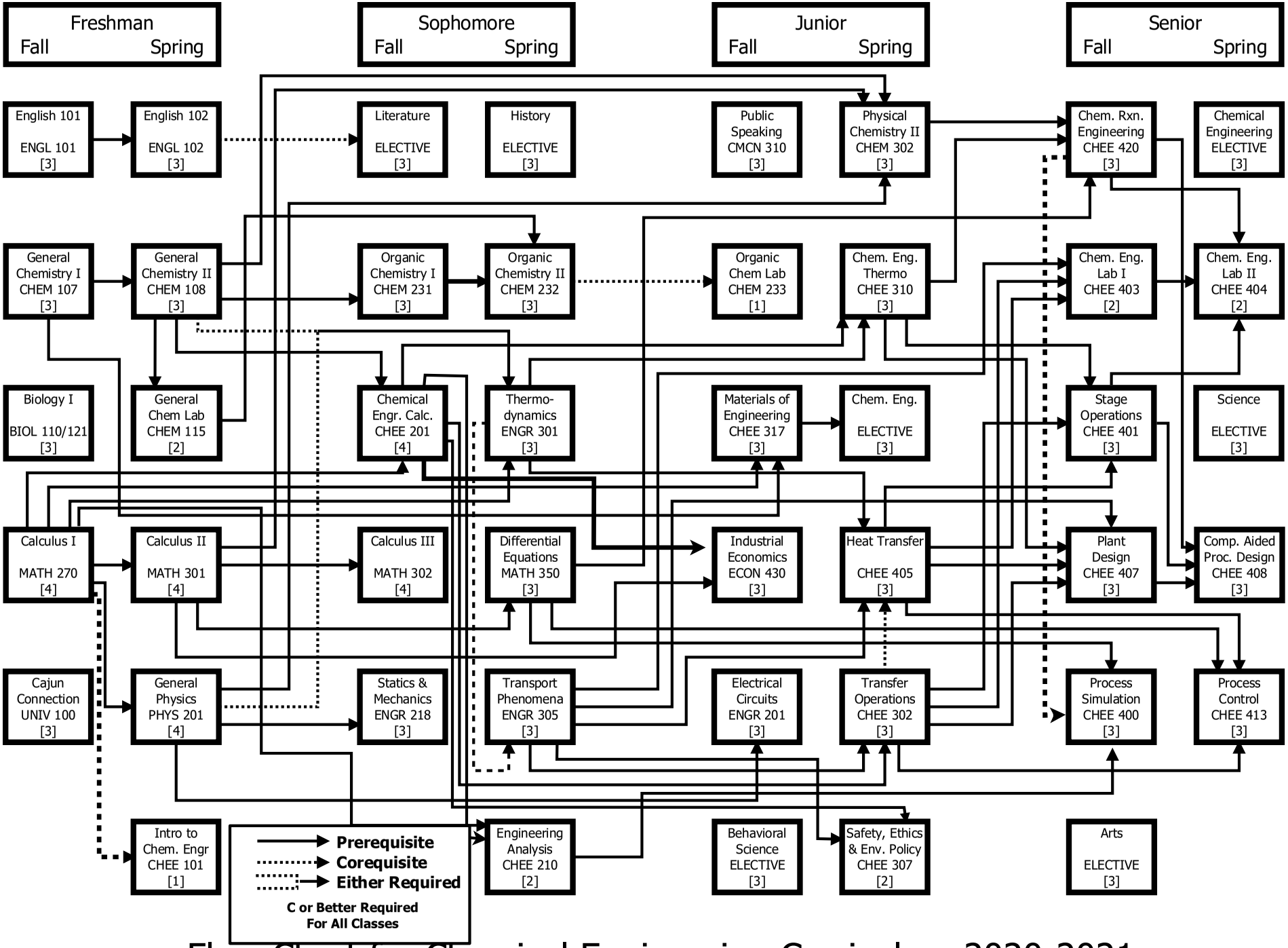

Flow Chart for Chemical Engineering Curriculum 2020-2021